REV	EC No.	DESCRIPTION	Symbol	DATE
A	/	new release	/	Dec. 12, 2020

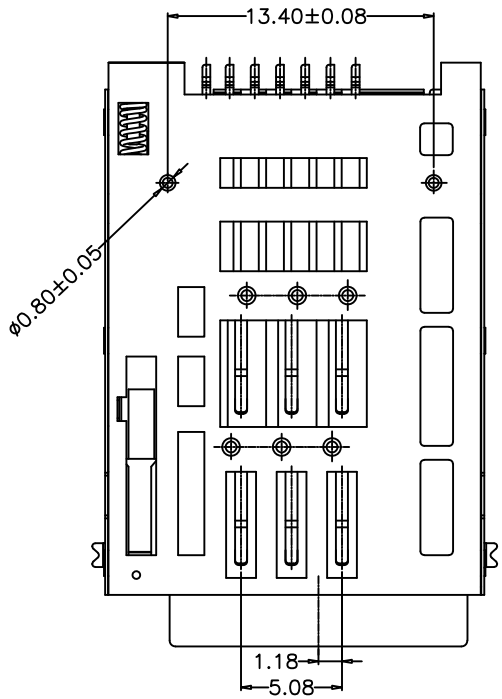

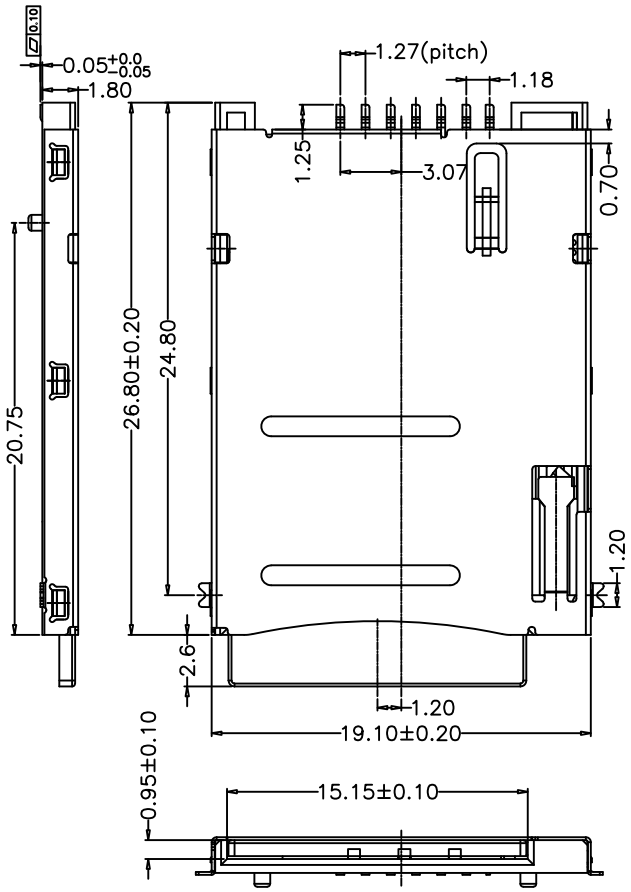

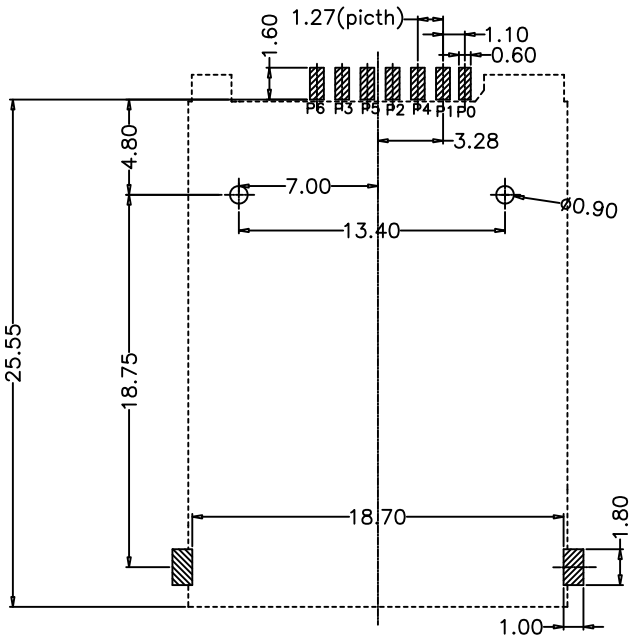

PCB LAYOUT TOLERANCE ±0.05

CIRCUIT:

SIM CARD GOUND	SIM CARD CD	SIM CARD GOUND	SIM CARD CD
WITHOUT SIM CARD		SIM CARD INSERTED	

PIN NO.	CONNECTOR TERMINAL
P0	CD
P1	VCC: PWR SIGNAL AND GND
P2	RST: RESET SIGNAL
P3	CLK: CLOCKING SIGNAL
P4	GND: RWR SIGNAL AND GND
P5	VPP: PROGRAMMING VOLTAGE
P6	I/O: SERIAL DATA INPUT/OUTPUT

SPECIFICATION:
1.MATERIAL:
1.1 HOUSING:LCP UL94V-0
1.2 TERMINAL:COPPER ALLOY
1.3 SHELL: STAINLESS STEEL
2.PLATED
2.1 TERMINAL:G/F PLATED ON CONTACT AREA
TIN ON SOLDER AREA
3.ELECTRICAL CHARACTERISTICS:
3.1 CURRENT RATING:DC 0.5A max.
3.2 VOLTAGE RATING:DC 30V.
3.3 CONTACT RESISTANCE: 50mΩ max
3.4 INSULATION RESISTANCE:1000MΩ min.
at 500V DC.
3.5 WITHSTANDING VOLTAGE:500V AC
for 1 minute.
4.OPERATION TEMPERATURE:-40°C~+85°C
5.DURABILITY :5000CYCLES
6.PACKAGE: TAPE REEL,600PCS/REEL

For more information, please help to contact: connmold@foxmail.com Tel.:18922965797
WWW.connmold.COM

ConnMold

DIMENSION UNITS	TOLERANCE
MM	X±0.50 .XX±0.25 .X±0.35 .XXX±0.15

DRWN:Robert	Dec.12,2020	PART NAME: SIM PUSH TYPE 1.80MM HEIGHT
CHK'D:Yuri	Dec.12,2020	PART NUMBER: CMSIM661010B; REVISION: A
APPR:Linda	Dec.12,2020	
THIRD ANGLE PROJECTION	CUSTOMER P/N: /	CUSTOMER: GENERAL MARKET; SHEET NUMBER: 1 OF 1